Alle Rechte vorbehalten/ *All rights reserved*

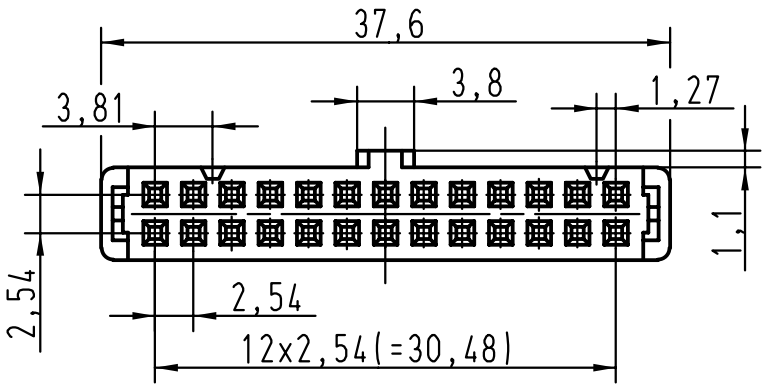

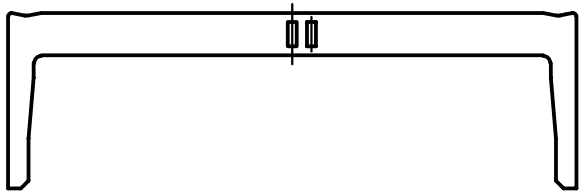

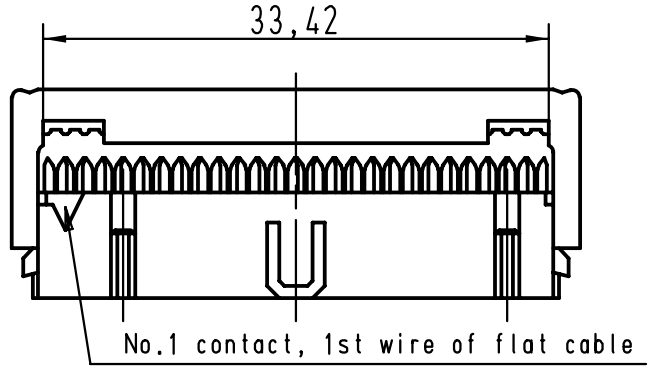

pre assembled

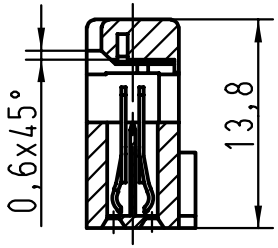

fitted

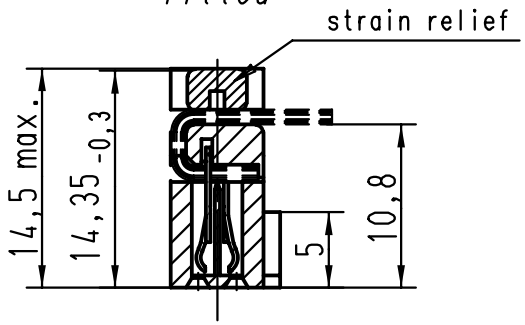

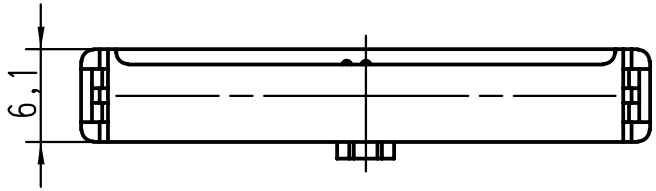

Part-No.	performence level		Mod.	Dat.	Name
09185265814	0,76 µm Au				
09185266814	2				
09185267814	3		29757	25-MAR-02	CV

	Dat.	Name
Detail.	25-MAR-02	CV
Insp.		
Stand.		

All Dim. in mm
Orig. Size DIN A 4

HARTING EURL
F-95972 Paris

SEK 18 Female connector
26 poles with central polarisation, closed end cover and strain relief

Maßstab/ *Scale* 2 : 1

TB 0918526X814

Sub.

Blatt/ *Page* 1