LOADING PATTERN MATING SIDE

f	6	6	6	6	6	6	6	6	6	6	6	6	6	6	6	6	6	6
e	5	5	5	5	5	5	5	5	5	5	5	5	5	5	5	5	5	5
d	5	5	5	5	5	5	5	5	5	5	5	5	5	5	5	5	4	4
c	5	5	5	5	5	5	5	5	5	5	5	5	5	5	5	5	5	5
b	5	5	5	5	5	5	5	5	5	5	5	5	5	5	5	5	5	5
a	5	5	5	5	5	5	5	5	5	5	5	5	5	5	5	5	4	4
z	6	6	6	6	6	6	6	6	6	6	6	6	6	6	6	6	6	6
POS	01				05				10				15				19	

LOADED CONNECTOR ASSEMBLY
(FOR EXAMPLE)

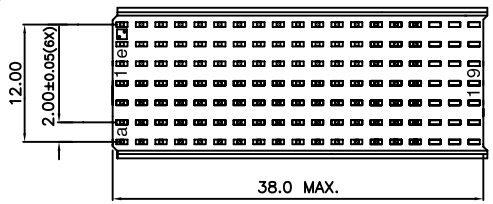

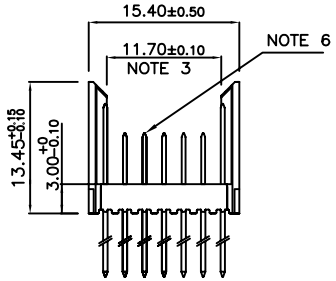

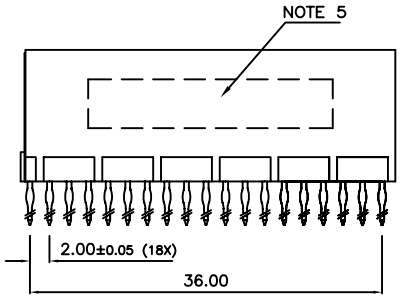

CONTACT OVERVIEW

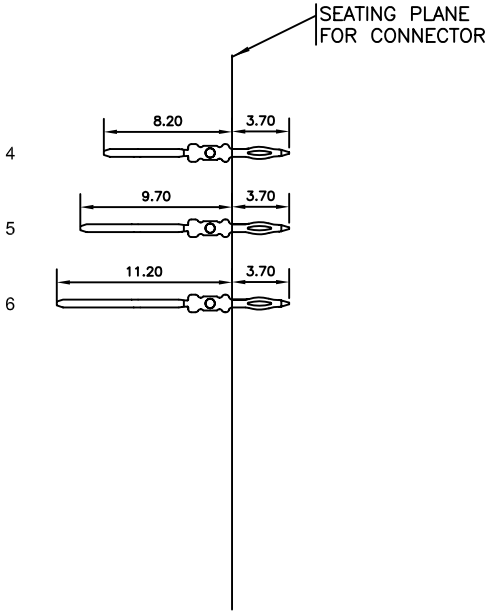

LAY–OUT P.C.B.–HOLE

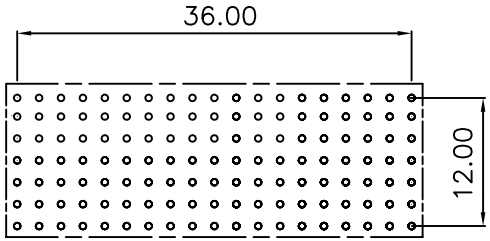

HM2P71PDK321----

LEAD FREE INDICATOR : LF = LEAD FREE
(DIGIT 15 & 16)

PLATING CODE (DIGIT 13 AND 14)
(REF DRW NO. BS,C , 201844 , 003)

NOTES

1. THIS PRODUCT IS CSA APPROVED.
2. THIS PRODUCT IS UL RECOGNIZED.
3. MEASURED AT THE BOTTOM.
4. MATERIAL CONTACT: PHOSPHORBRONZE
   HOUSING: CREAM WHITE GLASS FILLED POLYESTER UL-94V0
5. CONNECTOR PRINTED WITH P/N AND DATE CODE.
6. FOR ACTUAL CONTACT LOADINGS, SEE LOADING PATTERN MATING SIDE.
7. SHAPE OF CONNECTOR HOUSING CAN ALTER DEPENDING ON PRODUCTION LOCATION
8. THE PRODUCT (LF) MEETS EUROPEAN UNION DIRECTIVES AND OTHER COUNTRY REGULATIONS AS DESCRIBED IN GS-22-008
9. FOR RECOMMENDED PTH DIMENSIONS REFER DRAWING : BS, A , 201572 , 001

CATALOG NO: HM2P71PDK321----

ltr	ecn no	dr	date
A	107-0048	AB	2007-04-09

mat'l. code	SEE NOTE 4	
surface	ISO 1302	
tolerance	ISO 406 ISO 1101	
tolerances unless otherwise specified	angles 0°±1°	linear .0±0.2 / .00±0.1
projection		
MM		
scale	–	
product family	MILLIPACS	
title	MPACS 5+2R STR HDR PF CONN TYPE B 19 POS.	
dwg no	BS, C ,203028,765	
sheet 1 of 1	size A3	
type	Product Customer Drawing	

dr	ALEX BABU	2007-04-09
engr	BIJU K PAUL	2007-04-09
chr	BIJU K PAUL	2007-04-09
appd	BIJU K PAUL	2007-04-09

sheet index	revision	A
	sheet	1

form: A3

FCIconnect.com
Copyright FCI

PDM: Rev:A STATUS:Released Printed: Dec 04, 2007